11 - 2010
SP6000, SP6000X1, SP6000X2
6-1/2" PLUNGE CUT CIRCULAR SAW

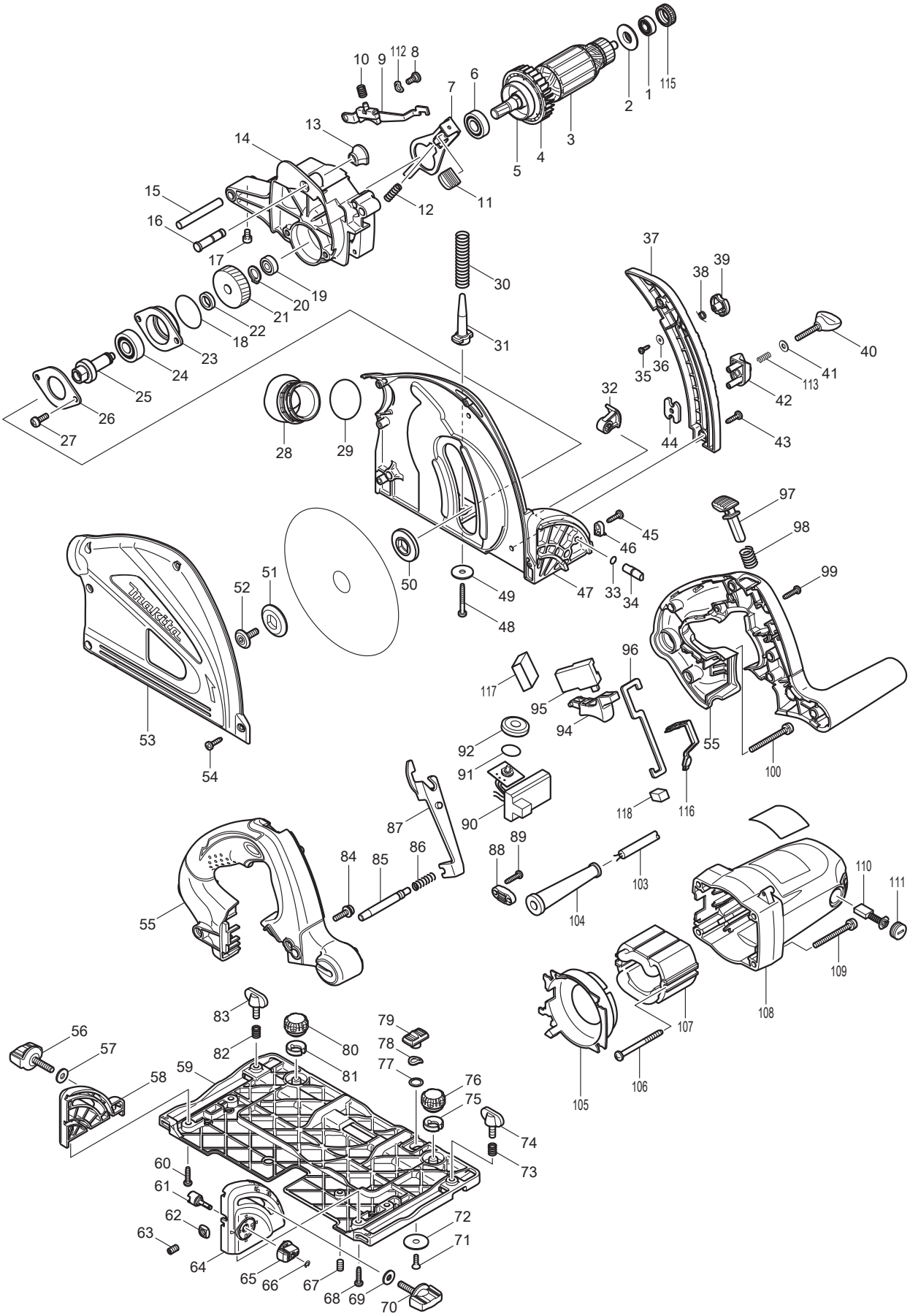

PARTS LIST

Item No	Type	Ref	Part No		Description	Qty	Unit
001	1		210013-5		BALL BEARING 698VV	1	PC.
002			681634-4		INSULATION WASHER	1	PC.
003	2		510590-0		ARMATURE ASS'Y 115V	1	PC.
003	2	INC			Item No. 1,2,4-6		
004			240091-1		FAN 60	1	PC.
005			345767-6		DRUM	1	PC.
006	2		210216-1		BALL BEARING 6001DDW	1	PC.
007			345742-2		SHAFT LOCK	1	PC.
008			265011-4		+ BINDING HEAD SCREW K5	1	PC.
009	1		158096-6	*	SHOE COMPLETE	1	PC.
010			233480-7		COMPRESSION SPRING 7	1	PC.
011	2		286039-9		CAP	1	PC.
012			233084-5		COMPRESSION SPRING 6	1	PC.
013	2		286040-4		CAP	1	PC.
014	2		144586-5		GEAR HOUSING COMPLETE	1	PC.
014	2	INC	263002-9		RUBBER PIN 4	1	PC.
015	3		324716-6	*	PIN 8	1	PC.
015	4		327B66-0	*	PIN 8	1	PC.
016			324708-5		STOPPER PIN 8	1	PC.
017	2		265907-9	*	HEX. SOCKET HEAD BOLT M5X10	1	PC.
018			213512-6		O RING 39	1	PC.
019	1		211021-9		BALL BEARING 607LLB	1	PC.
020			961052-5		RETAINING RING S-12	1	PC.
021			226637-7		HELICAL GEAR 39	1	PC.
022			257010-0		RING 12	1	PC.
023			318088-9		BEARING BOX	1	PC.
024	1		211129-9		BALL BEARING 6201DDW	1	PC.
024	2		210195-3		BALL BEARING 6201DDW	1	PC.
025			324707-7		SPINDLE	1	PC.
026			285689-7		BEARING RETAINER 55	1	PC.
027			911221-8		PAN HEAD SCREW M5X16	2	PC.
028			419620-3		DUST NOZZLE	1	PC.
029	2		213416-2		O RING 26	1	PC.
030			233479-2		COMPRESSION SPRING 11	1	PC.
031			419624-5		SPRING HOLDER	1	PC.
032	2		144867-7		LEVER 20 COMPLETE	1	PC.

Item No	Type	Ref	Part No		Description	Qty	Unit
032	2	INC	263002-9		RUBBER PIN 4	1	PC.
033			213021-5		O RING 5	1	PC.
034			324710-8		PIN 8	1	PC.
035			266007-8		TAPPING SCREW BIND PT 3X10	1	PC.
036			253821-1		FLAT WASHER 3	1	PC.
037	2		457756-0		DEPTH GUIDE	1	PC.
038			231665-9		TORSION SPRING 7	1	PC.
039			419630-0		LOCK LEVER	1	PC.
040			251867-1		SCREW M5X30	1	PC.
041			941101-4		FLAT WASHER 5	1	PC.
042			419623-7		STOPPER BLOCK	1	PC.
043			266034-5		TAPPING SCREW CT 4X16	2	PC.
044			345744-8		NUT PLATE	1	PC.
045			266034-5		TAPPING SCREW CT 4X16	1	PC.
046			419632-6		POSITION PLATE	1	PC.
047	3		140D56-6		BLADE CASE COMPLETE	1	PC.
047	3	INC	286041-2		CAP 14	2	PC.
047	3	INC	347392-9		FLAT WASHER 4	2	PC.
047	3	INC	345747-2		SPACER PLATE	2	PC.
047	3	INC	259008-3		PUSH NUT 4	2	PC.
047	3	INC	347392-9		PLATE	2	PC.
047	3	INC	233025-1		COMPRESSION SPRING 2	2	PC.
048			266053-1		TAPPING SCREW 4X35	1	PC.
049			253010-8		FLAT WASHER 6	1	PC.
050	2		224593-5		INNER FLANGE 35	1	PC.
051	2		224409-4		OUTER FLANGE 35	1	PC.
052			266403-0		HEX. SOCKET HEAD BOLT M6	1	PC.
053	1		158214-6	*	BLADE CASE COVER COMPLETE	1	PC.
053	1	INC	810303-2	*	CAUTION LABEL - N/L/A	1	PC.
053	3		319709-6	*	BLADE CASE COVER COMPLETE	1	PC.
054			266034-5		TAPPING SCREW CT 4X16	5	PC.
055			188197-6		HANDLE SET	1	SET
056			265776-8		THUMB SCREW M6X26	1	PC.
057			253111-2		FLAT WASHER 6	1	PC.
058			419596-4		REAR ANGULAR GUIDE	1	PC.
059			318179-6		BASE	1	PC.
060			265995-6		TAPPING SCREW 4X18	2	PC.

Item No	Type	Ref	Part No	Description	Qty	Unit
061			324731-0	STOPPER PIN	1	PC.
062			252157-5	SQUARE NUT M6	1	PC.
063	2		266225-8	H.S.SET SCREW(FLAT POINT)M6X8	1	PC.
064	2		413A11-6	FRONT ANGULAR GUIDE	1	PC.
065	2		457963-5	DIAL 22	1	PC.
066			961017-7	STOP RING E-3	1	PC.
067	2		266225-8	H.S.SET SCREW(FLAT POINT)M6X8	2	PC.
068			265995-6	TAPPING SCREW 4X18	2	PC.
069			253111-2	FLAT WASHER 6	1	PC.
070			265776-8	THUMB SCREW M6X26	1	PC.
071			912112-6	COUNTERSUNK HEAD SCREW M4X10	1	PC.
072			345748-0	LOCK WASHER	1	PC.
073	2		231240-1	COMPRESSION SPRING 7	1	PC.
074			265701-9	SCREW M6X14	1	PC.
075			419627-9	HOLDER	1	PC.
076			265775-0	THUMB SCREW M4X3	1	PC.
077	2		345977-5	PLATE	1	PC.
078			253932-2	WAVE WASHER 10	1	PC.
079	2		458092-7	SLIDE LEVER	1	PC.
080			265775-0	THUMB SCREW M4X3	1	PC.
081			419627-9	HOLDER	1	PC.
082	2		231240-1	COMPRESSION SPRING 7	1	PC.
083			265701-9	SCREW M6X14	1	PC.
084			922232-8	HEX. SOCKET HEAD BOLT M5X20	1	PC.
085			324709-3	LOCK PIN 8	1	PC.
086			233267-7	COMPRESSION SPRING 7	1	PC.
087			419631-8	LOCK PLATE	1	PC.
088	2		687123-7	CORD CRAMP (STRAIN RELIEF)	1	PC.
089			265995-6	TAPPING SCREW 4X18	2	PC.
090			631728-5	CONTROLLER	1	PC.
091			213261-5	O RING 17	1	PC.
092			418905-4	DIAL	1	PC.
094			419622-9	SWITCH LEVER	1	PC.
095			651922-3	SWITCH TG71B, SINGLE, W/O LOCK	1	PC.
096			345745-6	LINK PLATE	1	PC.
097			419629-5	LOCK OFF BUTTON	1	PC.
098			233089-5	COMPRESSION SPRING 12	1	PC.

Item No	Type	Ref	Part No		Description	Qty	Unit
099			265995-6		TAPPING SCREW 4X18	6	PC.
100			911273-9		PAN HEAD SCREW M5X50	1	PC.
101			862913-1		NAME PLATE F/ SP6000	1	PC.
103			664265-4		CORD WITH PLUG 2P-16-2.5M SJ	1	PC.
104	2		682574-9		CORD GUARD 10-90	1	PC.
105			419626-1		BAFFLE PLATE	1	PC.
106			266044-2		TAPPING SCREW 5X60	2	PC.
107			525741-2		FIELD ASS'Y 115V	1	PC.
107		INC	654020-2		RING TERMINAL	2	PC.
107	2	INC	654485-8		PARALELL SPLICE	2	PC.
108	1		158094-0	*	MOTOR HOUSING COMPLETE	1	PC.
108	1	INC	643708-9		BRUSH HOLDER 5-11	2	PC.
108	2		143397-5	*	MOTOR HOUSING COMPLETE	1	PC.
108	2	INC	807F46-1	*	CAUTION LABEL	1	PC.
108	2	INC	807E21-1	*	CAUTION LABEL	1	PC.
108	2	INC	643708-9		BRUSH HOLDER 5-11	2	PC.
109			911273-9		PAN HEAD SCREW M5X50	4	PC.
110	2		194996-6		CARBON BRUSH CB-303 2PC/SET (W/ ORIGIN)	1	SET
111			643750-0		BRUSH HOLDER CAP	2	PC.
112			267781-1		WAVE WASHER 7	1	PC.
113			231372-4		COMPRESSION SPRING 5	1	PC.
115			421479-6		RUBBER RING 19	1	PC.
116			424047-4		PACKING	1	PC.
117			424050-5		SPONGE	1	PC.
118			443137-4		FELT	1	PC.
A01	2		A-99932		6-1/2" CT BLADE 48T 20MM WOOD	1	PC.
A01	Opt.		A-98809		6-1/2" CT BLADE 48T 20MM CORIAN	1	PC.
A01	Opt.		A-99982		6-1/2" CT BLADE 60T 20MM MDF	1	PC.
A01	Opt.	2	A-99976		6-1/2" CT BLADE 56T 20MM ALUM	1	PC.
A01	Opt.	2	A-99960		6-1/2" CT BLADE 28T 20MM WOOD	1	PC.
A02			783203-8		HEX. WRENCH 5	1	PC.
A03			165447-6		GUIDE RULE SUB BASE (No Longer SE from Jun 2	1	PC.
A04			122562-9		DUST BAG ASSY	1	PC.
A05			194925-9		GUIDE RAIL 1900MM	1	PC.
A05			199140-0		GUIDE RAIL 1000MM		
A05			199141-8		GUIDE RAIL 1500MM		
A05			194367-7		GUIDE RAIL 3000MM	1	PC.

Item No	Type	Ref	Part No		Description	Qty	Unit
A05			194368-5		GUIDE RAIL 1400MM	1	PC.
A06			194385-5		CLAMP SET	1	SET
A07	4		197213-3		INTERLOCKING TOOL CASE XL	1	PC.
A07	4	INC	453974-8		LOCKING LATCH	4	PC.
A08	2		196664-7	*	BEVEL GUIDE SET	1	SET
A09			194416-0		VINYL SHEET 384" (10000MM)	1	SET
A10			194417-8		RUBBER SEAT 10000 SET	1	SET
A11			194419-4		POSITION SEAT 3000 SET	1	SET
A11			194418-6		POSITION SEAT 1400 SET	1	SET
A12			P-80013		VACUUM HOSE ADAPTER (SE from Feb2008 to Ma	1	PC.
A13	2		B-57613		GUIDE RAIL HOLDER,BLUE,1500MM	1	PC.
A14			SP6000-ACC1		SP6000 ACCESSORY KIT	1	SET
A14		INC			Item No. A04, A06, A08		
A15			195546-0		FRONT CUFF 24 (Added as SE from MKC Prof. May	1	PC.
A16			T-02571		FOAM INSERT F/INTERLOCK CASE	4	PC.
A17	2		E-10936		GUIDE RAIL BAG 3000MM	1	PC.
A17	2		E-05664		GUIDE RAIL BAG 1500MM	1	PC.
A18			198885-7		GUIDE RAIL CONNECTORS	1	PC.
A19			199826-6		RATCHET CLAMP SET	1	PC.
C01			872682-6		CARTON	1	PC.
F28			1913K7-3		PARALLEL GUIDE SET (MM)	1	PC.

SERVICE CHANGES: SP6000

1. Changes on Flat washer 10 (T/I# 81172)

Item No.	Description	Type 1	Type 2
77	Flat Washer / Plate	267070-4	345977-4

2. Changes on Bevel Guide Set (T/I# A1654)

Item No.	Description	Type 1	Type 2
A08	Bevel guide set	194433-0	196664-7

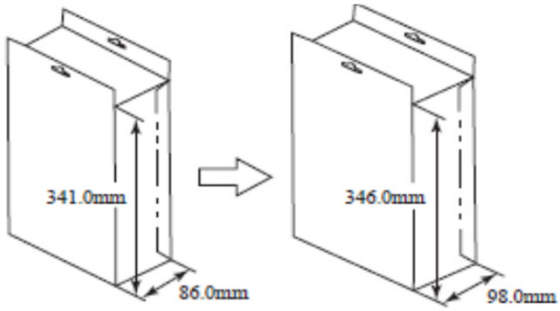

3. Changes on M6x10 Hex socket set screw (flat point) and PIN 8 (TI#B7108) (TI#C0221) (T/I#DH707)

Item No.	Description	Type 1	Type 2	Type 3	Type 4
15	PIN 8	324716-6	326960-1	324716-6	327B66-0
17	HSH BOLT M5X8 > M5X10	265913-4	265907-9		

Type 2 Use 326960-1 with 265907-9

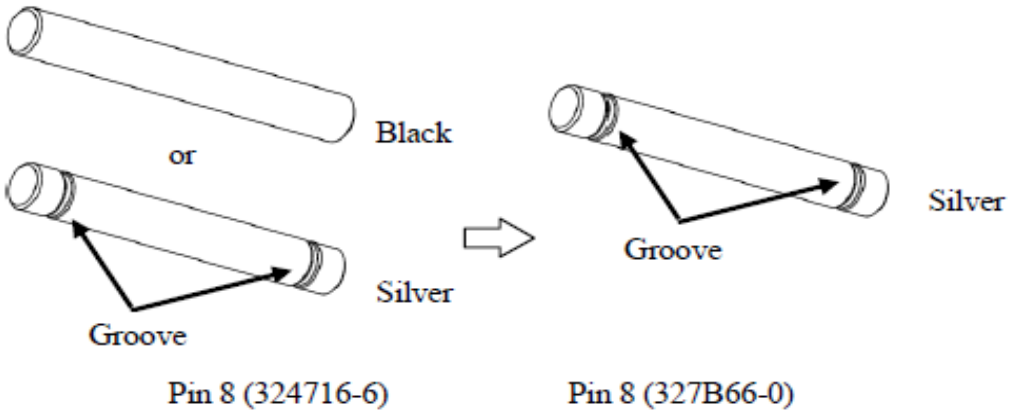

If the current PIN 8 has grooves, it can be used.

4. Position of Caution label has been changed from Blade case cover to the sides of Motorhousing

(TI#B7641, C0286) (T/I# C1259)

Item No.	Description	Type 1	Type 2	Type 3
53	Blade Case Cover	158214-6	318084-7 (N/L/A)	319709-6
53 INC.	Caution label	810303-2	---	
108	Motor housing	158094-0	143397-5	
108 INC.	Caution label	---	807E21-1	
108 INC.	Caution label	---	807F46-1	
122	O Ring 16	----	213045-1	----

Above parts are Interchangeable as a set.

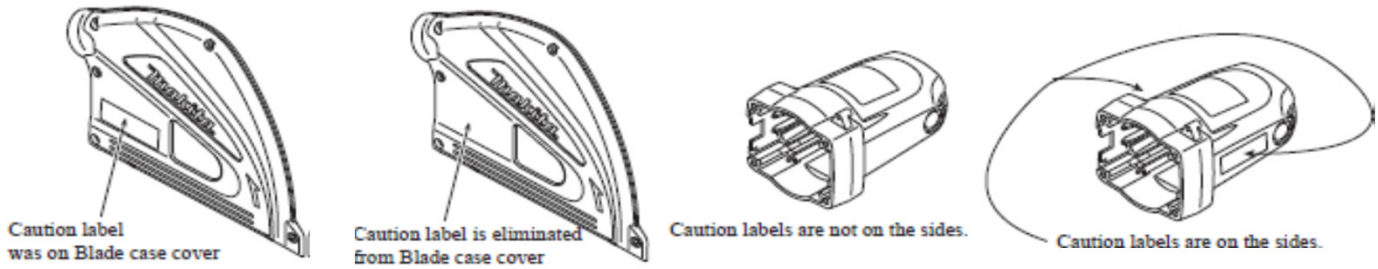
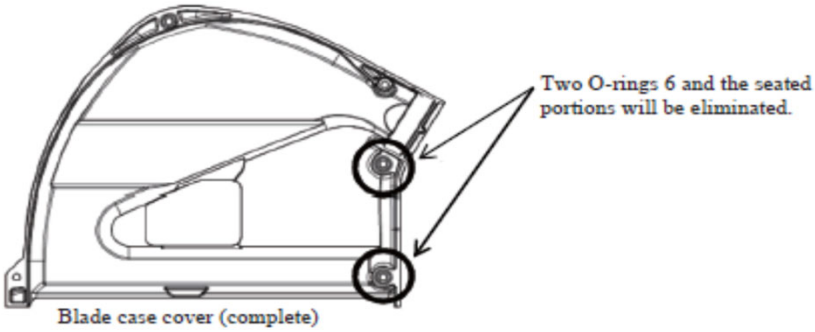
Item No. 22 - Addition and removal of Two O Ring 6